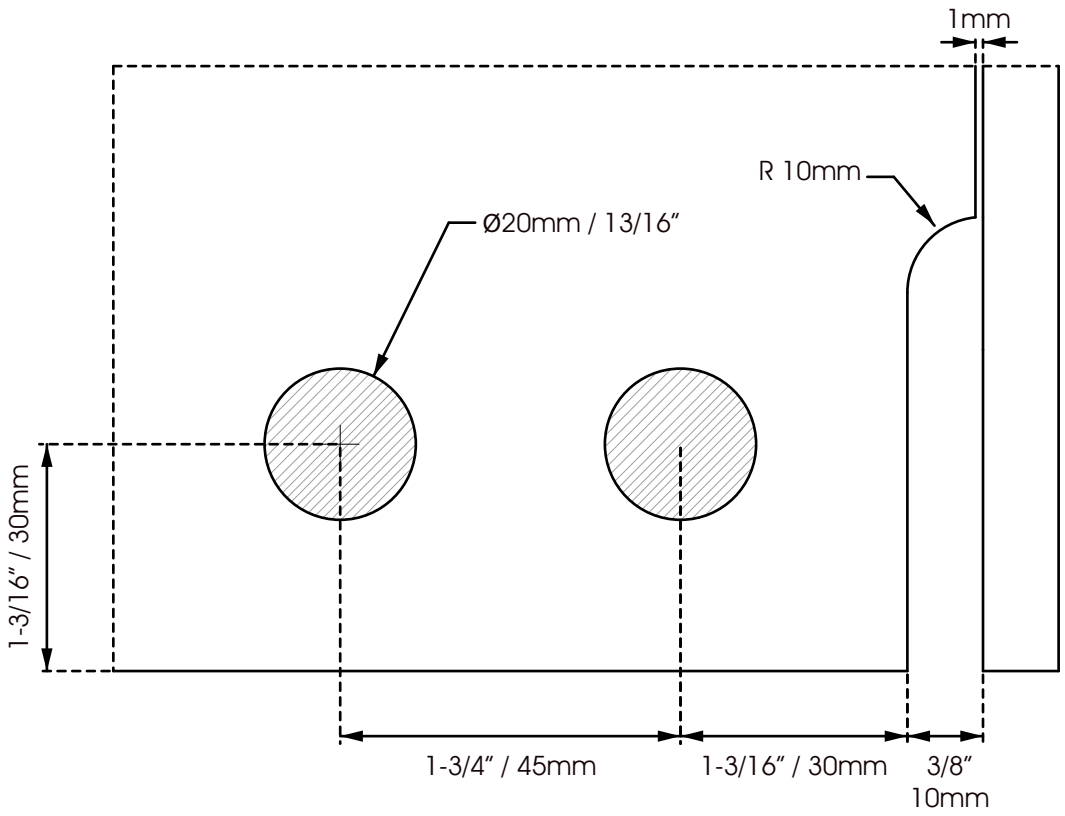
1mm
R 10mm
Ø20mm / 13/16"
1-3/16" / 30mm
1-3/4" / 45mm
1-3/16" / 30mm
3/8"
10mm

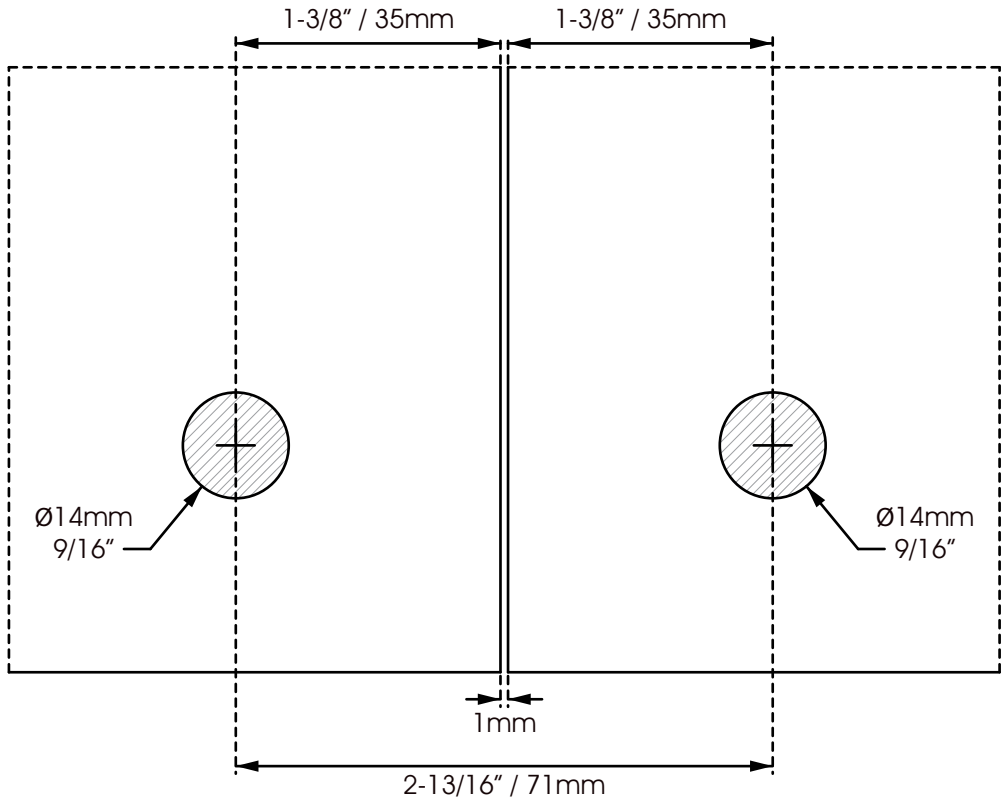
1-3/8" / 35mm
1-3/8" / 35mm
Ø14mm
9/16"
Ø14mm
9/16"
1mm
2-13/16" / 71mm