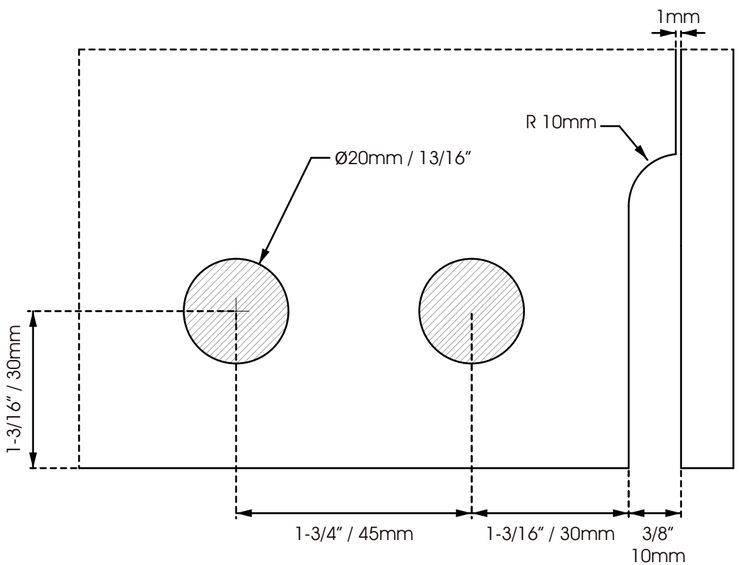
1mm
R 10mm
Ø20mm / 13/16"
1-3/16" / 30mm
1-3/4" / 45mm
1-3/16" / 30mm
3/8"
10mm

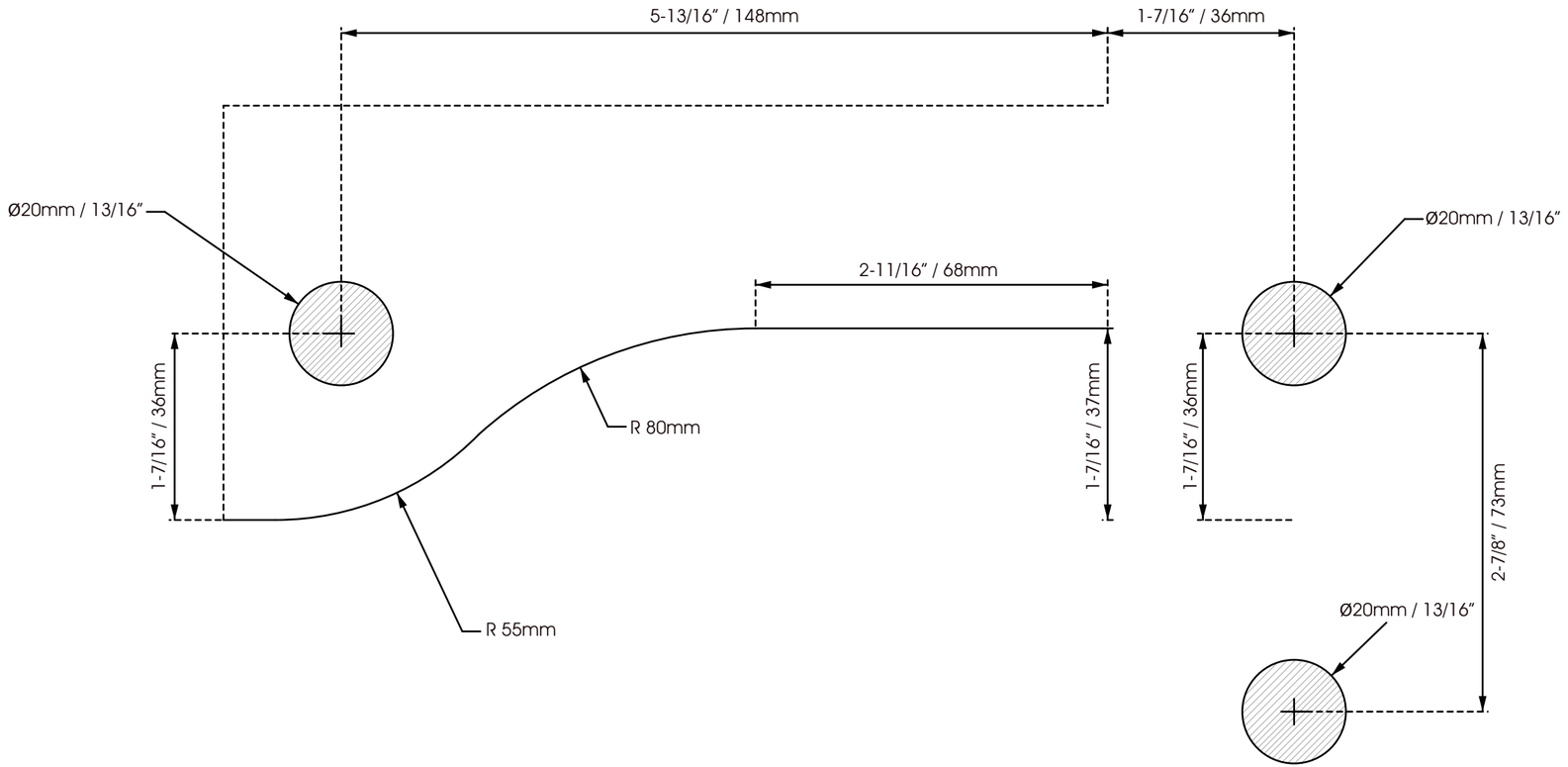
5-13/16" / 148mm
1-7/16" / 36mm
Ø20mm / 13/16"
Ø20mm / 13/16"
2-11/16" / 68mm
1-7/16" / 36mm
R 80mm
1-7/16" / 37mm
1-7/16" / 36mm
2-7/8" / 73mm
R 55mm
Ø20mm / 13/16"