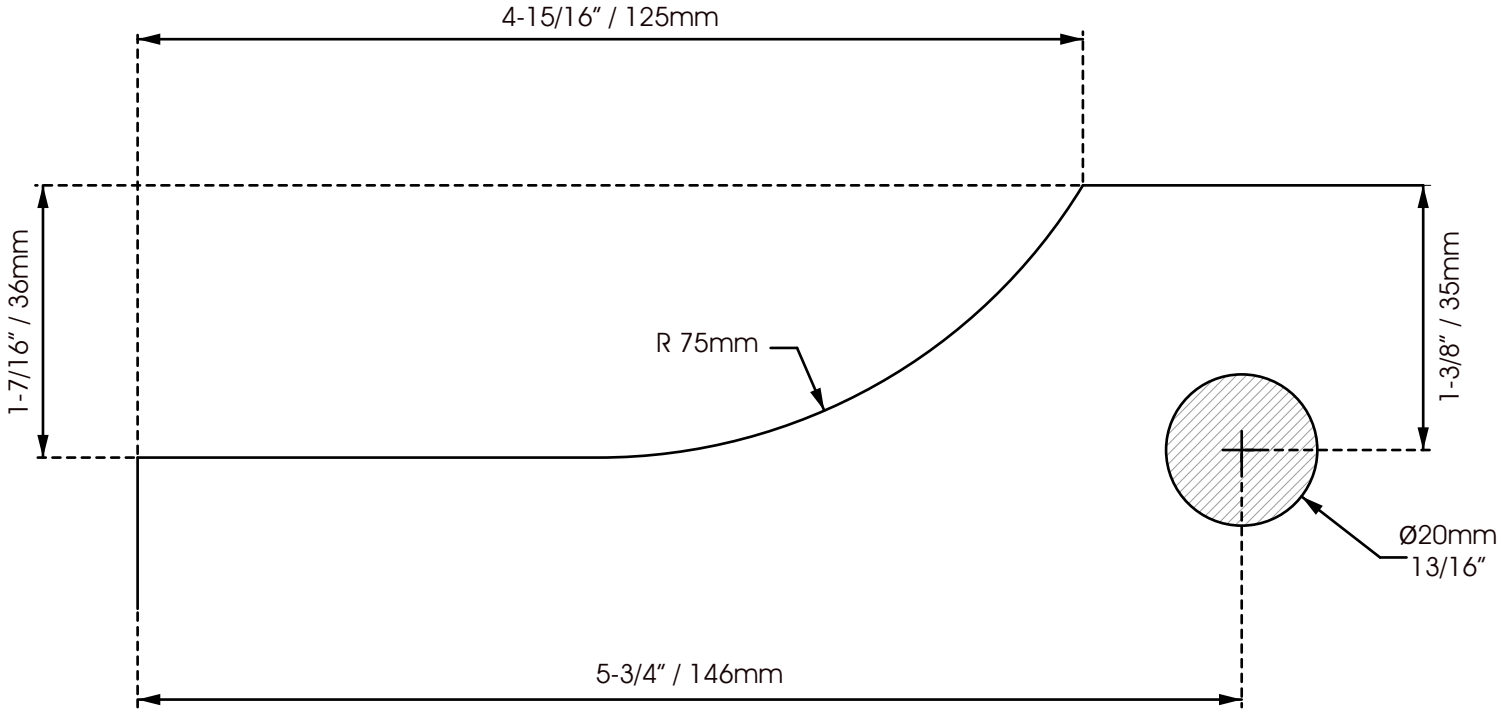
4-15/16" / 125mm
1-7/16" / 36mm
R 75mm
1-3/8" / 35mm
Ø20mm
13/16"
5-3/4" / 146mm